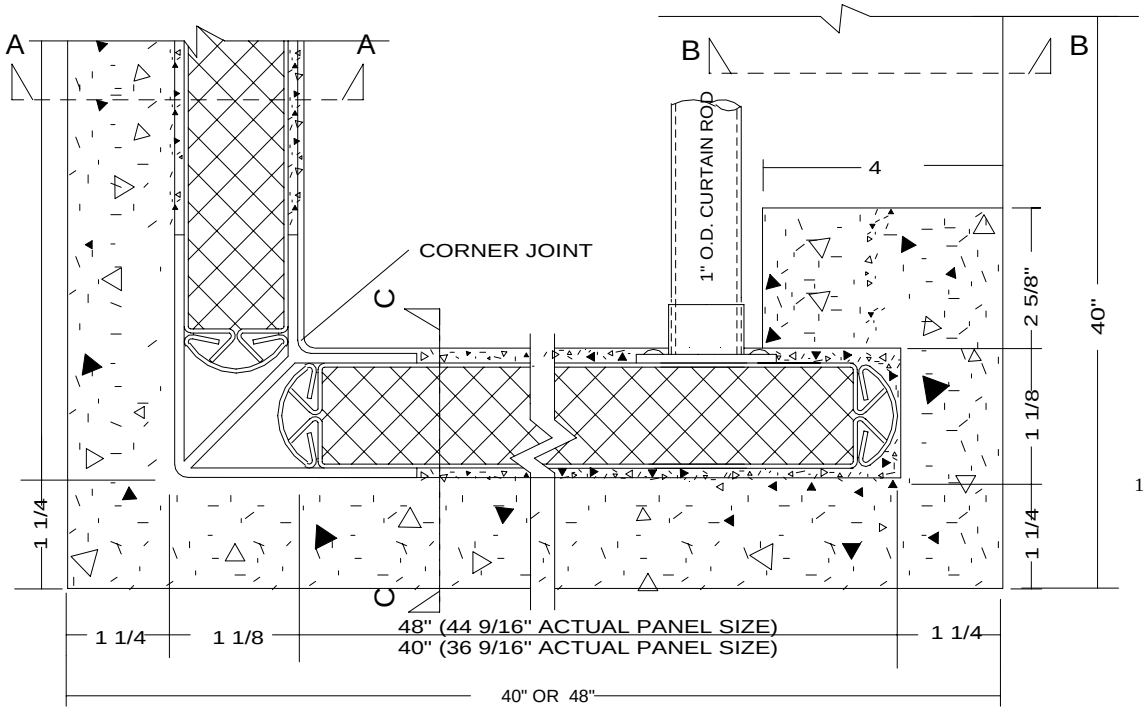

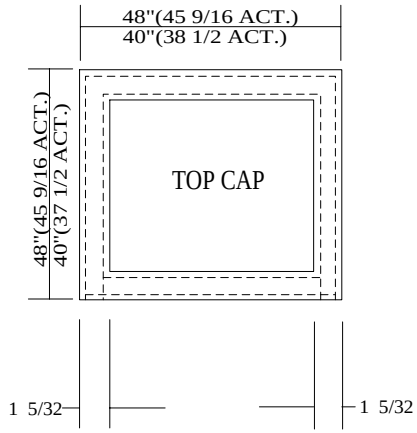

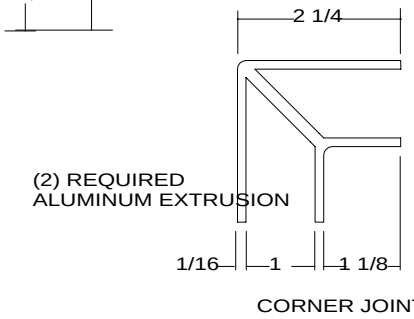

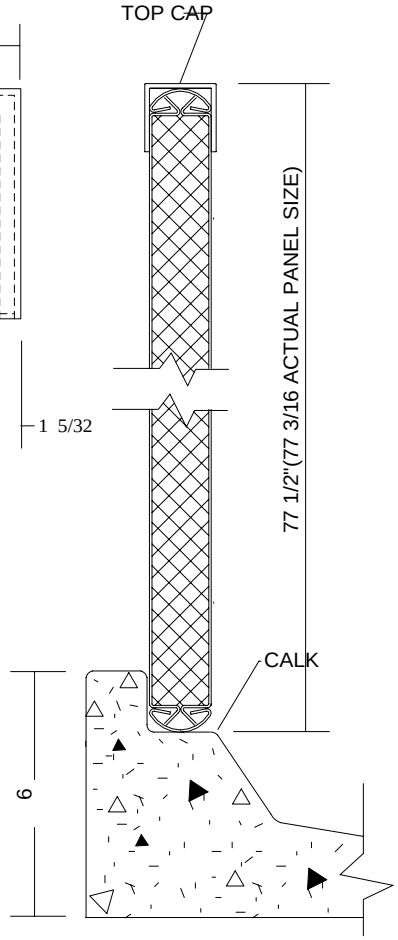

SECTION A-A

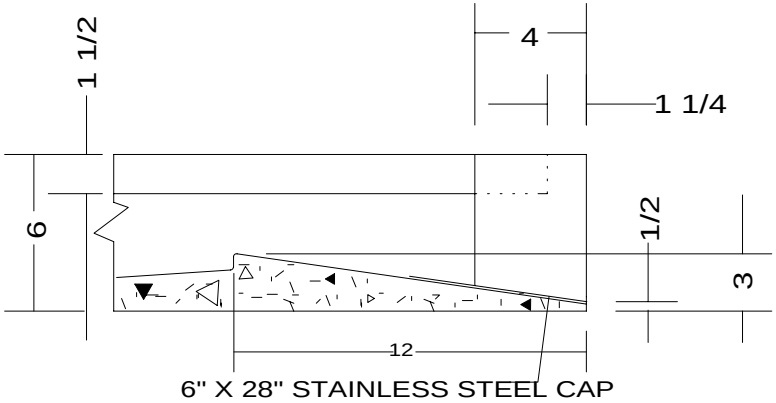

SECTION B-B

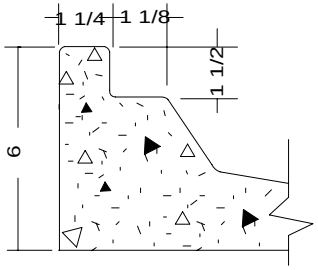

SECTION C-C

NOTE: WE SUGGEST A FLOOR DRAIN AT THE ENTRANCE TO THE SHOWER FLOOR

GENERAL PARTITIONS Mfg. Corp.
1702 Peninsula Drive, Erie PA
P.O. Box 8370, Erie, PA 16505-0370
Phone (814) 833-1154 FAX (814) 838-3473